Graphic Era HILL UNIVERSITY
Established by an Act of the State Legislature of Uttarakhand (Adhiniyam Sankhya 12 of 2011)
University under section 2(f) of UGC Act, 1956

Mid Term (Odd) Semester Examination October 2024

Roll no.....

Name of the Course and semester: Electronics & Communication/ 3rd semester
Name of the Paper: Network Theory
Paper Code: TEC 303
Time: 1.5 hour

Maximum Marks: 50

Note:

(i) Answer all the questions by choosing any one of the sub questions
(ii) Each question carries 10 marks.

Q1. (10 Marks)

A. State and explain compensation theorem. CO1

OR

B. State and explain Millman's theorem with suitable example. CO1

Q2. (10 Marks)

A. Obtain The Cut Set Matrix for the graph given below: CO2

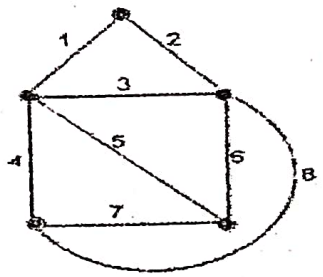

OR

B. Find the Tie-Set matrix for the graph given below: CO2

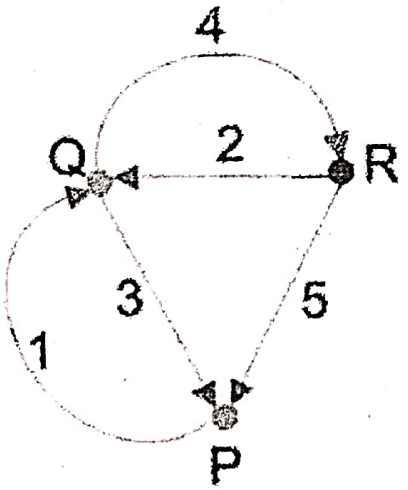

Mid Term (Odd) Semester Examination October 2024

Q3. (10 Marks)

a. Find the current flowing through 5 ohm resistor: CO1

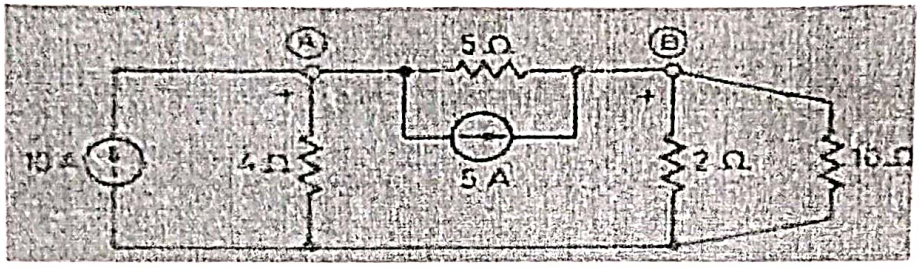

OR

b. Draw Thevenins equivalent across terminal ab for the network given below: CO1

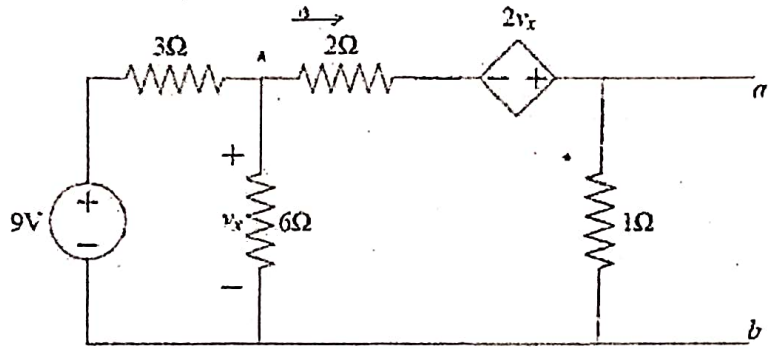

Q4. (10 Marks)

a. Find current through 20 ohm resistor using superposition theorem: CO1

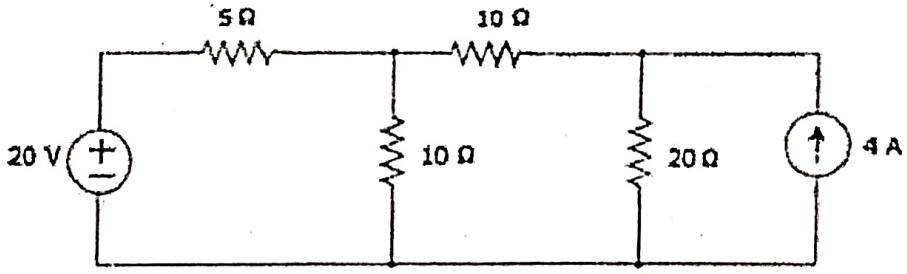

OR

b. Give the derivation of Maximum power transfer theorem for an AC circuit. CO1